Better Or Just Not So Bad? An Evaluation Of Russian Combat Effectiveness In The Second Chechen War

Michael Orr

Introduction

It is agreed on all sides that the Russian armed forces performed appallingly badly in the First Chechen War (1994-96). Despite claims from some senior commanders that in August 1996 the Russian forces were on the verge of decisive victory when they were betrayed by their political leadership, there are valid comparison to be made with wars such as the Crimean War, the Russo-Japanese War or the Russo-Finnish War. All these conflicts exposed the weakness of the Russian armed forces after a period of major political and technical change. Each revealed a requirement for far-reaching military reform and even the most loyal or unobservant of Russian officers could hardly deny the need in 1996. Indeed, those who have been loudest in claiming that they were robbed of victory in 1996, the group of commanders associated with General Kvashnin and the North Caucasus Military District (MD), have also been the most active in the work of reform.

This chapter examines Russian effectiveness in certain key areas, especially command and control, manning and deployment and tactics, in order to assess the progress of reform and current state of the Russian army. The conclusion attempts to assess how Russian forces will perform as the war changes character. It should be remembered however that the Chechen war is still in progress at the time of writing and useful analytical material is only just beginning to appear in the Russian press. Any conclusions must remain provisional until the material for a full account of the war is available.

Command And Control In The Second Chechen War

Developments Between The First And Second Chechen Wars

Most analysts are agreed that the rivalries between the different branches of the armed services, their mutual distrust and failure to coordinate operations were major factors in the poor performance of the Russian armed services during the First Chechen War. It is therefore not surprising that since 1996 a major priority for military reform has been to improve coordination between the forces of the various ministries. As a result during the Second Chechen War Russian forces have been operating in new structures, known as "Joint Force Groupings" (*ob'yedinennaya gruppirovka voysk*). The aim of this section is to describe the development of these groupings and to make a preliminary assessment of their effectiveness.

Joint force doctrines, permanent headquarters and forces are now the staple of Western armed services, rooted particularly in the Anglo-American experience of war in the second half of the twentieth century. Even so, their development has not been simple. We should remember that the Soviet/Russian military experience in

the same period has been very different. Throughout its history Russia has been overwhelmingly a land power and other armed services have naturally played a subordinate role. During the Great Patriotic War amphibious operations were basically coastal out-flanking movements, far removed from the oceanic invasions mounted in the Atlantic and Pacific theatres. The Russian air force never developed a true strategic bombing capability during the war, however significant its contribution at the tactical and operational levels. Even the addition after 1945 of two new armed services, the Air Defence Force and the Strategic Rocket Forces did not significantly effect the dominant position of the ground forces in senior command appointments and most crucially in the General Staff itself. A survey of the operational headquarters developed in the last years of the Soviet Union, the Strategic Theatres and Theatres of Military Operations, would show that their commanders and senior staffs were always drawn from the ground forces. The other services provided deputy commanders to organize the application of their forces in support of operations planned and directed by ground forces headquarters.

The end of the Cold War and the collapse of the USSR challenged this command system because of a shift in strategic focus. Internal threats and local conflicts around Russia's frontiers have become more important than full-scale war between super-power blocks, although the General Staff has been slow to abandon its fixation with "classic" forms of military operations. The ministry of defence argued for a long time that its forces should not be drawn into internal conflicts. The ministry of internal affairs was able to increase its resource allocation in order to meet these threats and other services, such as the Federal Border Guards Service or the Ministry for Civil Defence and Emergency Situations, claimed their share. President Yel'tsin's "divide and rule" politics positively encouraged the growth of military hierarchies and by the middle of the 1990s Russia possessed over a dozen armed services. Each had its own doctrine and procurement policy and bitter peacetime battles over budgets ensured that a phrase such as "interoperability" would have no equivalent in military Russian. Even the emergencies of the First Chechen War did not bring these competing agencies together. The Russian media was filled with their back-biting and mutual abuse. It was even reported that wounded soldiers might be refused treatment by medical units of other ministries.

Overall command of operations in the First Chechen War switched backwards and forwards between the ministry of defence and the ministry of internal affairs. At first the direction of operations was trusted to the ministers themselves but, quite apart from the doubtful competence of generals such as Pavel Grachev, the minister of defence, it was impossible to combine the roles of government minister and operational commander. A theatre command was eventually established, with the clumsy title of "Temporary Joint Forces of the Russian Federation in the Chechen Republic". Rapid changes of commander did not make for efficiency but the problems with this structure were more deeply rooted. The real chains of command led back to Moscow. The commander-in-chief in the North Caucasus could only use the forces notionally subordinated to him with the approval of their Moscow staffs. Even within the ministry of defence's own troops individual services retained a considerable autonomy. The airborne forces (VDV), it seems, could only be tasked through their Moscow headquarters and its "operational group" in Chechnya and resented being subordinated to ground force headquarters for particular operations. Logistic arrangements were even more tangled, with ministries responsible for their own troops and military districts all over Russia supporting their units deployed in Chechnya. In terms of command and control, as in every other aspect of the military art, the First Chechen War was an outstanding example of how not to do it.

It is hardly surprising that Russian MOD forces were most concerned by this lack of coordination. The theory and practice of command and control (*upravleniye*) is the staple diet of staff colleges and military academies but not a major concern for border guards or internal security forces. In addition, the army thought its place in the command chain had not reflected its dominant share in combat operations and casualties. The general staff therefore led the way in the discussion of how future joint operations should be commanded[1]. Steven Main's article describes these developments in more detail which it is unnecessary to repeat here, although some general comments are relevant.

Bureaucratic politics and personal ambition were major driving forces in this process, which was not primarily driven by military logic, but by the urge to restore the primacy of the ministry of defence among the security ministries. Furthermore, the aim was to raise the status of the general staff by establishing it as the natural agency to coordinate inter-service and inter-ministry policy and operations, with direct responsibility to the president as supreme commander-in-chief. The ministry of defence was willing to concede, in theory, that the border guards or interior troops should have primacy in minor border or internal disputes because it was clear that, in practice, only ministry of defence troops had the range of assets which would be required in a major conflict, wherever it might break out. The general staff believed that a chain of command which ran from the president and security council, through the chief of the general staff and operational-strategic commands based on military districts to joint force groupings would strengthen their hand in their disputes with the strategic rocket forces elements in the ministry of defence who wished to create a separate command centre for nuclear forces.

Given that the armed forces and the general staff were the driving force behind the development of new doctrines and structures it was natural that their objective was to standardize on existing army procedures. There seems to be little evidence that other agencies made a significant contribution or that a truly joint doctrine has been developed. As a consequence the new system emphasises (in western phraseology) "war fighting" rather than "operations other than war". The same basic doctrine and organization are applied, whether operations are conducted against internal or external enemies. The focus has been on technical problems of command, such as organizing the application of fire at operational and tactical levels of command and, as current operations in Chechnya demonstrate, neglected the coordination of operational and political objectives. By the summer of 1999 the Russian high command knew *how* they could fight a war in Chechnya, but had not properly defined *what* they were fighting for. It is, of course, possible to argue that as the main political objectives of the Second Chechen War were to be achieved in Moscow[2] and related to the Yel'tsin succession or power-struggles within the ministry of defence, it is hardly surprising that the end-state in Chechnya was never defined more precisely than "re-establishing constitutional order".

The Operational Level of Command In The Second Chechen War

As far as the author is aware, the Russians have not published a full order of battle of their forces in Chechnya and much of the detail of their command system and force grouping has to be inferred from references to commanders and entities in the open press. What follows therefore must be regarded as only a provisional attempt to reconstruct the Russian command structure.

When operations began in Dagestan in August 1999 the controlling headquarters was the Joint Grouping of Federal Forces in Dagestan, which was initially headed by a MVD officer. However as the scale of the operation grew and coordination between the force ministries became more difficult, president Yel'tsin decreed that the ministry of defence was to take overall command. (Marshal Sergeyev was to "play first fiddle"). Lieutenant General Gennadiy Troshev, 1st Deputy C-in-C of the North Caucasus MD, took command. When preparations began for operations in Chechnya itself, the Joint Grouping was expanded in size. Diagram 1 shows the operational command structure of the Joint Grouping of Russian Forces (generally abbreviated to OGV in Russian). There were initially 3 subordinate headquarters or "directions", reflecting the deployment of Russian forces on three sides of the Chechen republic. A fourth direction was added in December as the area of operations increased. The titles used in the Russian press vary quite frequently but those used in the diagram are the most common.

DIAGRAM 1
THE RUSSIAN OPERATIONAL COMMAND STRUCTURE IN THE SECOND CHECHEN WAR

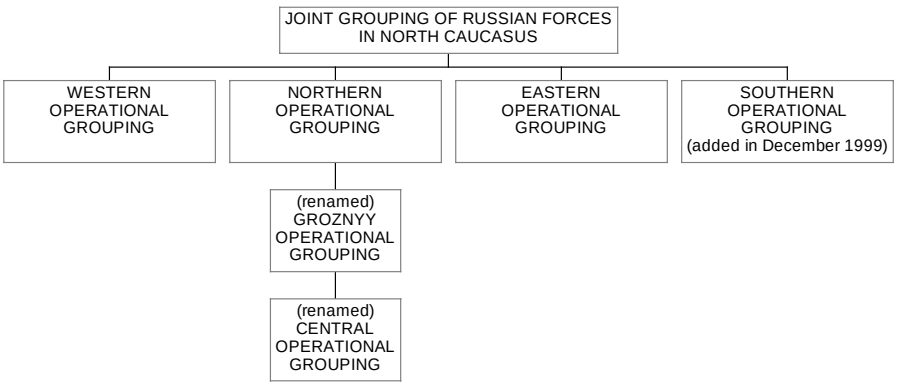

Notes:

1. Each operational grouping commanded a varying mix of ground forces regimental & battalion combat groups, “operational groups” of the VDV, naval infantry and the other security ministries. Some ground forces divisional headquarters may also have been involved.

2. The Northern Operational Grouping may have continued under that title while commanding operations in Groznyy.

These headquarters did not exist before the war started so how were they formed? Judging from their commanders, they seem to have been formed from the headquarters of the North Caucasus MD and its subordinate 58th Army. The first commander-in-chief of the OGV, General Viktor Kazantsev, was also c-in-c of the North Caucasus MD and the OGV chief of staff was the military district chief of staff, Lieutenant General Aleksandr Baranov. General Troshev's headquarters in Dagestan became the Eastern Operational Grouping. A Northern Operational Grouping was formed under Lieutenant General Vladimir Bulgakov, deputy commander of the North Caucasus MD for emergency situations. The third operational grouping, the Western, has been commanded by Lieutenant General Vladimir Shamanov, who is also commander of 58th Army, based in Vladikavkaz. The creation of these headquarters must have taxed the resources of the military district and it may not be a coincidence that the previous couple of years had apparently seen the disappearance of two corps headquarters in the North Caucasus.

We know very little about the workings of the grouping headquarters at whatever level. The main headquarters of the OGV, was originally based in Mozdok and then moved to Khankala, near Groznyy. The other ministries seem to have been represented through deputy commanders-in-chief of whom there must have been at least half a dozen, ranging from the deputy for MVD troops to the deputy for railway troops. In addition there were the usual deputy commanders for the air force, the rocket troops and artillery, rear services and other combat and service support elements. (General Kazantsev can hardly have taken a step in his headquarters without treading on a deputy's toes). Although the precise command relationship between Kazantsev and his deputies from the other ministries has not been spelt out it appears to be less troubled than in the first war. If the deputies have the right to appeal over Kazantsev's head to their Moscow headquarters they do not seem to have used it in a way to prejudice operations.

It should not, however, be assumed that the system has functioned smoothly at every level and in every respect. Although it has not approached the level of the first war, there has been a certain amount of back-biting in the press between different ministries and service branches, particularly between ground forces and MVD and ground forces and VDV. There have been a number of "friendly fire" incidents and MVD troops seem to have suffered in particular. In addition, ambushed MVD units have accused ministry of defence units of not keeping them up to date on enemy movements and even of ignoring requests for assistance. This has been blamed on poor liaison at staff level, MVD ignorance of army procedures and incompatible radio nets. It is significant that these problems were blamed for an incident in September 1999 when a MVD special forces sub-unit from Armavir was bombed by the Russian air force and again in March 2000 when an OMON detachment from Perm was ambushed and wiped out. Six months operational experience had apparently not led to improved coordination.

Naturally, any major tactical setback is likely to be followed by an outbreak of bickering and blame-shifting. When Major General Mikhail Malofeyev was killed in battle in Groznyy in January 2000, the ground forces were quick to question the competence and even courage of the reluctant MVD unit which Malofeyev was apparently trying to lead into battle. When an entire company of the 104th Parachute Regiment was wiped out near Ulus-Kert in March 2000, Gen Shpak, c-in-c of the VDV, publicly blamed Gen Troshev, commander of the eastern grouping and a ground forces officer. Such episodes indicate that the Russian forces are still not a "band of brothers". The distrust between the various elements is too strong to be removed by a couple of years of joint exercises. If it has caused less difficulty in the second war it is because commanders have learnt to work round the problem.

One technique has been to avoid mixing the forces of different subordination as much as possible. If sub-units of the MOD and MVD have to work together they are given separate objectives. For example, a Naval Infantry battalion might isolate and encircle a village but the task of clearing it would be given to a MVD sub-unit. The Airborne Forces appear to have insisted that VDV troops should be kept together in a VDV operational group. (The naval infantry also operated as an operational group, generally alongside the VDV). They also seem to have insisted that they should not be committed to street battles in Groznyy and other towns. This policy obviously limited flexibility in operational command. These supposedly elite assault troops could only be used in one operational direction and the other groupings had to make do with ordinary infantry. It should be noted that in May the Eastern Grouping came under the command of Major General Aleksandr Popov, deputy commander of the VDV for peacekeeping operations. His chief of staff was another

VDV officer, the chief of staff of 106th Airborne Division. The airborne forces were thus able to keep ground forces commanders out of their immediate chain of command.

Another way of improving cooperation between different ministry forces has been to pick commanders who are already friends. Thus when Major General Mukhridin Ashurov was given command of the Southern Operational Grouping which was specially formed for operations along the border with Chechnya, his deputy for border troops was Major General Viktor Zolotukhin. Ashurov had commanded 201st Motor Rifle Division in Tajikistan while Zolotukhin had commanded a vital sector of the border there. They were known to have a close professional and personal relationship. Lacking an effective joint doctrine the Russians have had to rely on such links to make their command system work.

Staff Work

Moving away from the problems of personal relationships between commanders, does the second Chechen war reveal any improvement in Russian staff work. Firstly, there is no doubt that the operation has been much better planned. Instead of the cry of "Davai! Davai!" (Crack on! Crack on!) which was said to typify decision-making in the first war, "No advance without security" might be the theme of the second war. Even when ridiculed in the media for their slow progress, Russian commanders have followed a programme of steady progress, exploiting their superior firepower and trying to minimize their casualties. In particular it is significant that at the end of Dagestan phase of the war an operational pause followed, while the force grouping was built up to strength of about 90,000 men and a series of shake-down exercises was held at every level of command from section to joint grouping. Another pause before the attack on Groznyy allowed re-grouping and the formation of storm detachments while aircraft and artillery bombarded the city.

A similar pattern can be seen in the conduct of media operations, or the "information war". The Russian military agreed that they had lost this war in 1994-96 and were determined to impose control in the second war. A rather clumsy policy of denying all access to independent sources might not have been effective if Russian and foreign reporters were not much more concerned about their personal safety among the Chechens than in the first war. In the event, the media has come to distrust both sides equally and also begun to lose interest as most of Chechnya has been occupied. However, any change in the balance of fortune in the war would rekindle the media's interest and the Russian media still have scores to settle.

As far as the basic mechanics of command are concerned, the Russian force in Chechnya is still following a Soviet model. Although automated command systems were being introduced at the end of the Soviet era, there is little evidence that they have been widely used in Chechnya, or that improved models have been introduced. Indeed the need for more widespread use of automated command systems has been mentioned by several senior officers[3]. Russian headquarters in the Chechen campaign seem to present the traditional image of crayoned maps, banks of telephones and a heavy weight of paperwork. The technology dates back twenty years or more. There have been some innovations, but they are mostly in organization, not equipment.

Manning And Deployment

There is no doubt that one of the root causes of the Russian failure in 1994-96 was their inability to raise and deploy a properly-trained military force. Thanks to their attempts to retain as much of the structure of the Soviet armed forces as possible, units were chronically under-manned. There were no formations, units or even sub-units which were combat ready; all were only cadre forces. The situation was made worse by the folly of the high command which, underestimating Chechen resistance, rushed so-called "composite units" into battle in Chechnya. Military districts tasked divisions to create composite regiments by fleshing out a skeleton regiment with individual or sub-unit reinforcements (see Diagram 2). Once a unit reached a strength of about 1,500 men it was considered combat ready, although that might be scarcely 60% of its notional wartime establishment. The composite regiment (or sometimes brigade) was then deployed to the North Caucasus.

DIAGRAM 2
MOBILIZATION FOR CHECHNYA 1994-95

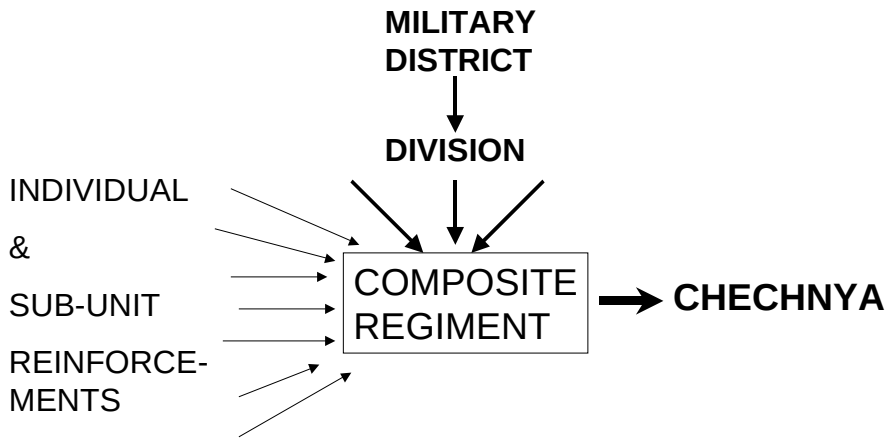

Training standards were appalling low. Many conscripts had only been in the army for a few months and could not be considered trained. Others were employed in roles for which they had not been trained; for example a radar operator might be nominated as a sniper. Attempts were made to recruit "contract servicemen" but these were not professional soldiers. A typical *contraktnik* might have been out of the army for up to ten years, have never served in the ground forces and have an alcohol or other social problem. As platoons, sections and crews were sometimes formed as they travelled to the Caucasus they had no time to get acquainted, let alone train together. There was no time for even basic unit training and specialist training, for example in urban combat, was out of the question. Junior leadership was weak. The Soviet and Russian armies had never developed a proper NCO corps and subalterns were in short supply and poorly trained. Even middle-ranking officers, at company and battalion levels, lacked experience and basic command skills.

In preparing for a new war, Russian commanders had to face the fact that the manpower system has not changed since 1996. A 1996 decree by President Yel'tsin

that the armed forces were to be completely professional by 2000 was a dead letter as soon as it was signed. The mixed manning system remained but the general staff could try to ameliorate its evil effects. The number of formations and units was cut so that those that remained could be better manned. Some were designated as "permanently ready forces" which were to be maintained at over 80% of their wartime manpower establishment and fully equipped. Training resources were concentrated to support them. They have been the basis of the present deployment (see Diagram 3), although some problems remain.

DIAGRAM 3
MOBILIZATION FOR CHECHNYA 1999

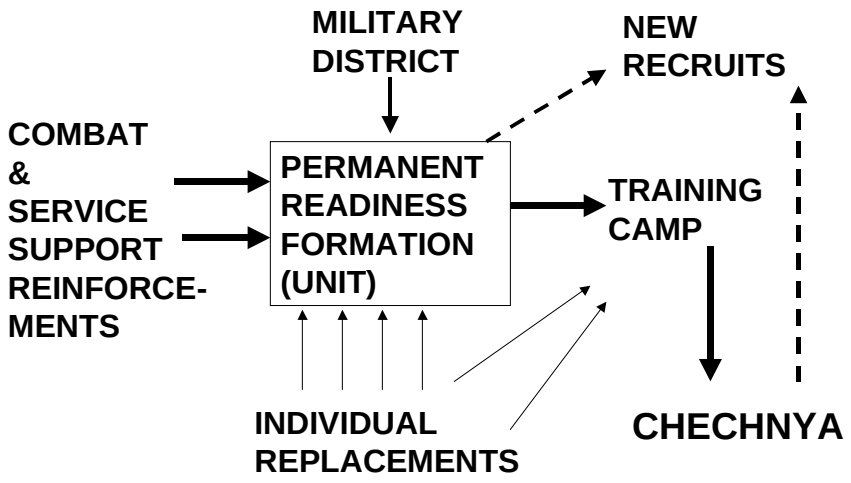

Because even the permanently ready forces have to rely on conscription, at any moment a significant proportion of their soldiers will still be completing basic training. At the start of the deployment it was illegal to send conscripts with less than 12 months service to a "hot spot". If these regulations had remained in force the deployment would have been crippled. Half of the conscripts, who normally serve for 2 years, would have been excluded. The deficiency could not have been made up by contract servicemen because they formed only 7% of the other ranks in the Joint Force Grouping in October 1999. The regulations were quickly changed so that only those with less than six months service were exempt but this still caused problems in some units. The 3rd Motor Rifle Division of the Moscow Military District had been raised as the first permanently ready division in early 1997. A high proportion of its soldiers came from the same conscript intake and had been discharged in spring 1999. Their replacements should not have been sent to Chechnya, although it appears that many did go initially. Some units were found to have up to 50% of soldiers with less than six months service; one motor rifle element was apparently 90% manned by men who had only been in uniform for one or two months[4]. Those with less than six months service were combed out before operations began in Chechnya itself but obviously the combat value of what should have been one of the Russian forces' most effective elements was compromised by this shuffling of personnel on the eve of battle. In the republic of Tatarstan local objections to the posting of junior conscripts were so strong that the Tatar president suspended conscription completely until they were returned.

As the diagram shows, it was therefore necessary to bring in individual replacements from the start of the deployment. However as units generally went through a training camp before they left their home military district and then took part in a programme of shake-down training in the North Caucasus, a much greater degree of tactical cohesion was achieved than in the first war. This programme of *boyevoye slazhivaniye* (combat coordination) began with sub-unit training from section to battalion level from 30 September to 7 October, followed by unit and formation training up to divisional level until 11 October and finally joint grouping exercises until 15 October[5]. Moreover, military districts did not disband their training camps after the first deployment. They continued to train contract servicemen as battle casualty replacements and once it was obvious that the campaign would not be "over by Christmas" to prepare new units for rotation to Chechnya in the new year and later to form the new 42nd Motor Rifle Division as a permanent garrison in Chechnya[6].

There is no doubt that the system has been effective. Ministry of defence forces in Chechnya reached a strength which is estimated at 60,000 men, probably twice the maximum number in the first war. In 1994-96 military districts struggled to man a single composite motor rifle regiment or brigade and some combat support or logistic elements. In 1999 they were able to field sizeable forces. The Siberian MD sent 7,000 men, the Volga MD contribution was a regimental tactical group, an artillery battalion, a maintenance battalion and a medical unit. The largest contribution (other than the North Caucasus MD) seems to have come from the Moscow MD whose contingent reached 12,000 men and included 4 regimental tactical groups. The proportion of contract servicemen has also increased as the war has continued. From 7% in October 1999 it had reached 17% by the end of the year and in April 2000 the head of the organization-mobilization directorate claimed that over 40% of other ranks were contract servicemen. He had earlier claimed that the proportion of contract servicemen in sections "at the sharp end" was reaching 80%, although this is not confirmed by other sources[7]. Questions remain about the quality of both conscript and contract soldiers and about the Russian army's ability to continue this level of deployment which will be discussed later, but credit should be given to staffs in Moscow and the military districts for their efforts to solve the manpower problem within the constraints imposed upon them.

Tactics

Tactical Organization

An earlier section tried to describe Russian combat organization in Chechnya at the operational level; this section looks at tactical structures. It must be admitted from the start that many details of tactical organization are still obscure, especially the links between tactical and operational levels of command. At the operational level command was exercised by the Joint Force Grouping and Joint Operational Groupings which have been described. It is clear that at the lower level combat was organized and directed by regimental, brigade and battalion tactical groups. The link between these levels is less clear. There are references to divisional staff officers and some ambiguous references to divisions. But there are many accounts in which the commander of a joint operational grouping oversees the operation of a regimental tactical group personally. In another report a signals officer was decorated for maintaining communications over a considerable period between the Western Operational Grouping headquarters and a motor rifle regiment in the mountains. It is possible that divisional headquarters and organizations such as

the "operational groups" of the VDV, naval infantry or other ministries were basically responsible for logistic support and did not have a tactical command function but at the moment this supposition is no more than a best guess.

This supposition or guess is perhaps supported by the Russian use of the term "tactical group" as in "regimental tactical group", "brigade tactical group" and "battalion tactical group". This is a comparatively new term in the Russian military lexicon, at least when describing their own forces. It was sometimes employed during the Afghan war and more recently to describe the organization of the Russian KFOR contingent. The phrase "tactical group" seems to be used to describe a entity built around a unit or sub-unit with a long-term allocation of combat and combat service support providing considerable tactical autonomy. Thus a battalion tactical group differs from the traditional "reinforced battalion" whose reinforcements were only allocated for a particular task, after which they would be reclaimed by the higher headquarters. The elements of a tactical group appear to work together more or less permanently within a specific zone of responsibility. This is a significant development in Russian tactical thinking. In many ways it is closer to the combat organizations of NATO armies than the traditional Soviet model which favoured rather small tactical entities, restricting their combat capabilities in order to concentrate resources at the operational level. The new structures, however, should not be seen as carbon copies of their NATO counterparts but rather as important steps in developing modern *Russian* tactics and organizations, rooted but not stuck in the past.

How are these tactical groups actually formed? Again, lacking detailed Russian orders of battle an element of assumption is required. There are very strong indications that a regimental or brigade tactical group is generally not equivalent in manpower to a full strength regiment or brigade, despite its additional combat and logistic support. The VDV grouping was originally said to be composed of four regimental and one brigade tactical group, numbering something over 5,000 men. After the rotation of units in early 2000 the force was reduced to three regimental and one battalion tactical group and a strength of 4,000 men[8]. These figures suggest that a brigade or regimental tactical group would have a strength of about 1,000 men, although a full-strength regiment, without reinforcement, should number at least 1,500 men. In one article a motor rifle regimental tactical group is described as holding a 10-15 km front with 1,200 to 1,500 men, but a full-strength regiment might include up to 2,500 men[9].

It is the author's tentative conclusion that airborne and motor rifle regiments as a rule left one of their battalions behind in their peacetime garrisons to train new recruits and deployed to Chechnya with 2 airborne or motor rifle battalions and the bulk of their support elements. Additional combat or logistic support would be added to form the tactical group. The reinforcements might include more artillery and forward observation officers (FOO) and forward air controllers (FAC). In the field the two battalions would also form tactical groups and might alternate defensive and offensive missions. The first might secure a base area and be deployed in static platoon strongpoints and checkpoints and the second operate as a "troop manoeuvre group" (*voyskovaya manevrennaya gruppa*) to conduct mobile missions such as raids or sweeps. Alternating the missions would permit troops to rest and train between operations.

Diagram 4 illustrates the composition of a naval infantry battalion tactical group as described in the Russian press. A motor rifle battalion tactical group would be similar but would have more organic logistic support and would almost certainly

have a tank company attached. If the author is correct in assuming that this force could hardly exceed 500 men in number it appears that the tactical group's "bayonet strength" (the number of men in infantry sections) would be rather weak. In the initial phase of the war Russian tactics minimized this weakness, because they sought to avoid close contact battles, but as the war settles into a counter-insurgency campaign the lack of "leg" infantry may become more significant.

DIAGRAM 4
EXAMPLE OF A BATTALION TACTICAL GROUP BASED ON A NAVAL INFANTRY BATTALION OF THE NORTHERN FLEET

Organic elements of Assault Landing Battalion	**Elements Attached To Battalion During Operations in Chechnya (From Northern Fleet Unless Otherwise Stated)**
Battalion HQ	SP Artillery Battery (6 x 2S1 122mm Howitzers)
3 Assault-Landing Companies	SP Artillery Battery (“Nona” 120mm Gun) [Caspian Flotilla]
(BTR-equipped)	Composite Mortar Battery
Mortar Battery	Anti-sniper Group [Special forces]
ATGW Battery	Engineer Company
Signals Platoon	Reconnaissance Company [Black Sea Fleet]
Supply platoon	10 KamAz Trucks
(Ural-375 trucks)	Mobile Signals Group (SATCOM)
	Forward Observation Officer
	Forward Air Controller

NB Only elements & weapons systems specifically mentioned in Russian press are listed. Other organic or attached elements may have formed part of this battalion tactical group.

Russian Tactics In The Second Chechen War

After the disasters of 1994-96 many Russian officers seem to have believed that a second Chechen war was not only inevitable but essential. Professional disgrace could only be wiped out by an overwhelming victory but a new war would have to be fought with an army which was essentially unchanged. Massive re-equipment was out of the question, the human material was no different from the troops who were so easily de-moralized in the first war. But it might be possible to fight in a way which would maximize the strengths of the Russian armed forces and reduce their weaknesses. Broadly speaking, the strength of the Russian army was material and its weakness was human. It had inherited from the Soviet Army an arsenal of modern, if no longer state-of-the-art, weapons but its soldiers were poorly trained and badly motivated. The ammunition which was filling bunkers all over Russia could be used prodigally but Russian society would not tolerate the pointless casualty rates of the first war. Generally speaking those casualties had occurred when Russian soldiers had to fight the Chechens at close quarters. In effect, the Russian army had lost the tactical initiative and fought the war on the Chechen rebels' terms.

The openly-stated tactical principle of the Second Chechen War has been to minimize casualties by fighting at maximum range. Although called a "counter-terrorist operation" the counter-insurgency tactics taught in western staff colleges were of little interest. The key doctrine was the "long-range fire destruction of the

enemy" and the centre of tactical planning was the "fire planning and coordination group" in individual headquarters. Concepts and weapons which had been developed for a major war with NATO were adapted for a local war against an enemy who was almost totally without heavy weapons.

Although Russian tactics relied on the application of overwhelming firepower they were not unsophisticated nor were they dependent on traditional Soviet concepts. An interesting article by Colonel General Karatuyev, the chief of the Rocket Troops and Artillery, had the revealing title "The God Of War Changes Tactics"[10]. It describes the system for allocating artillery resources and planning their use as employed in Chechnya. Traditionally, the Soviet/Russian approach was to concentrate assets under higher operational commanders; tactical-level commanders were expected to fulfil tasks allocated in the senior commander's fire plan. This very centralized system gave flexibility at the operational level and worked very well in the Great Patriotic War. It was adapted for the nuclear age but the process of collecting reconnaissance data, planning strikes and distributing orders was too lengthy in an age of manoeuvre warfare or when facing small groups of fast-moving guerrillas. The new concept, called the "zonal-territorial method", de-centralized assets and responsibility. It was originally set in a general war context but was developed for use in the "counter-terrorist operation" which the general staff were planning[11]. General Karatuyev explained the basic principles:

> "The zonal-territorial method envisages that every troop entity from battalion upwards will have a defined zone of responsibility for reconnaissance and fire destruction, which will be controlled by the corresponding combined-arms commander. As a result, inertia is reduced and decentralization is feasible. Lower level commanders can develop possibilities of showing initiative and using artillery more actively in the interests of their own sub-units on the one hand and on the other they bear increased responsibility for the results of the fire plan."

Zones of responsibility overlap so that higher commanders might attack targets more suited to the range or capability of their weapons, hence the requirement for "fire planning and coordination groups" in headquarters. Artillery assets were allocated in accordance with this system. Every company was reinforced with an artillery or mortar battery, with a FOO wherever possible. Battalion commanders also had an least a battery of artillery under their own control. At operational levels of command mixed composition artillery regiments, with tube and rocket artillery elements, were provided.

Some army aviation assets were allocated on the same principle, with an "aviation tactical group" of Mi-24 and Mi-8 helicopters operating in direct support of regimental or tactical groups (see Diagram 5). One or two pairs of Mi-24s would attack targets as tasked by the combined arms commander through a FAC at regimental, battalion or even company level. The Mi-8 helicopters in the group were available to rescue the crew of a downed helicopter or to control strikes if there was no FAC. The number of FACs had been severely reduced during the 1990s and to provide for operations in Chechnya intensive courses were run for both air force and combined arms officers during the war[12].

With a more effective system of fire planning and control, the Russians were in a position to exploit their overwhelming superiority in air power and artillery during the advance into the Chechen republic which began in October 1999. Their guiding

principle might have been a modification of the First World War slogan "Artillery conquers, infantry occupies", if we add aviation to the conquering artillery. Before any advance the area in front of the troops was subjected to a prolonged series of artillery and air strikes until the Russian commanders felt confident that rebel resistance had been crushed. Any Chechen positions that were discovered in the course of the advance were quickly engaged by the artillery and aviation available to the company or battalion commander in whose zone of responsibility they were located. Once an area had been occupied bases were occupied and fortified, with platoon-sized strongpoints and smaller checkpoints in key positions. The Russians would then begin to reconnoitre their next advance, using fixed wing aircraft, helicopters, drones, ground patrols, radar and radio intercept, before beginning the process of fire destruction and advance again. In these early stages it was calculated that 80% of Russian firepower was delivered by fixed wing aircraft or helicopters and 15-17% by artillery. The proportion of air strikes has fallen in recent months; according to the commander-in-chief of the Air Force 14,000 sorties were flown in the first year of the war and 60% of Russian fire missions were air-delivered.[13]

DIAGRAM 5
AVIATION TACTICAL GROUPS

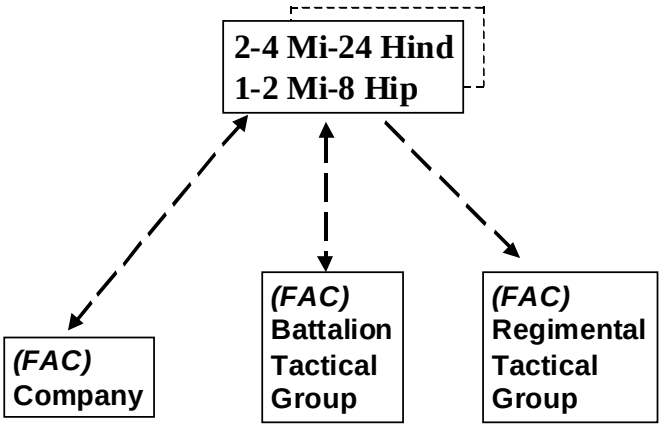

In succession, the plains north of the Terek, the hills around Groznyy, Groznyy itself were occupied and then the focus shifted to the southern mountains and the border with Georgia. Although timetables may have been drawn up when planning the advance, Russian commanders do not seem to have been obliged to keep to them at the risk of unnecessary casualties. The contrast with the first war, when junior and middle-ranking commanders were under constant pressure to push on and secure objectives in unrealistic times, is very noticeable.

However much the Russian command may have wished to avoid close-quarter battles it was not always possible, especially in the battles for Groznyy and other major towns. But it was obvious that the mindless attacks of the first war could not be repeated. The lessons of the first war had been learnt and a real attempt was made to adapt the doctrine in Russian training manuals to the circumstances of Chechnya. More details of Russian tactics will no doubt emerge in the near future, but examples have already appeared in print.

Diagram 6:[14]

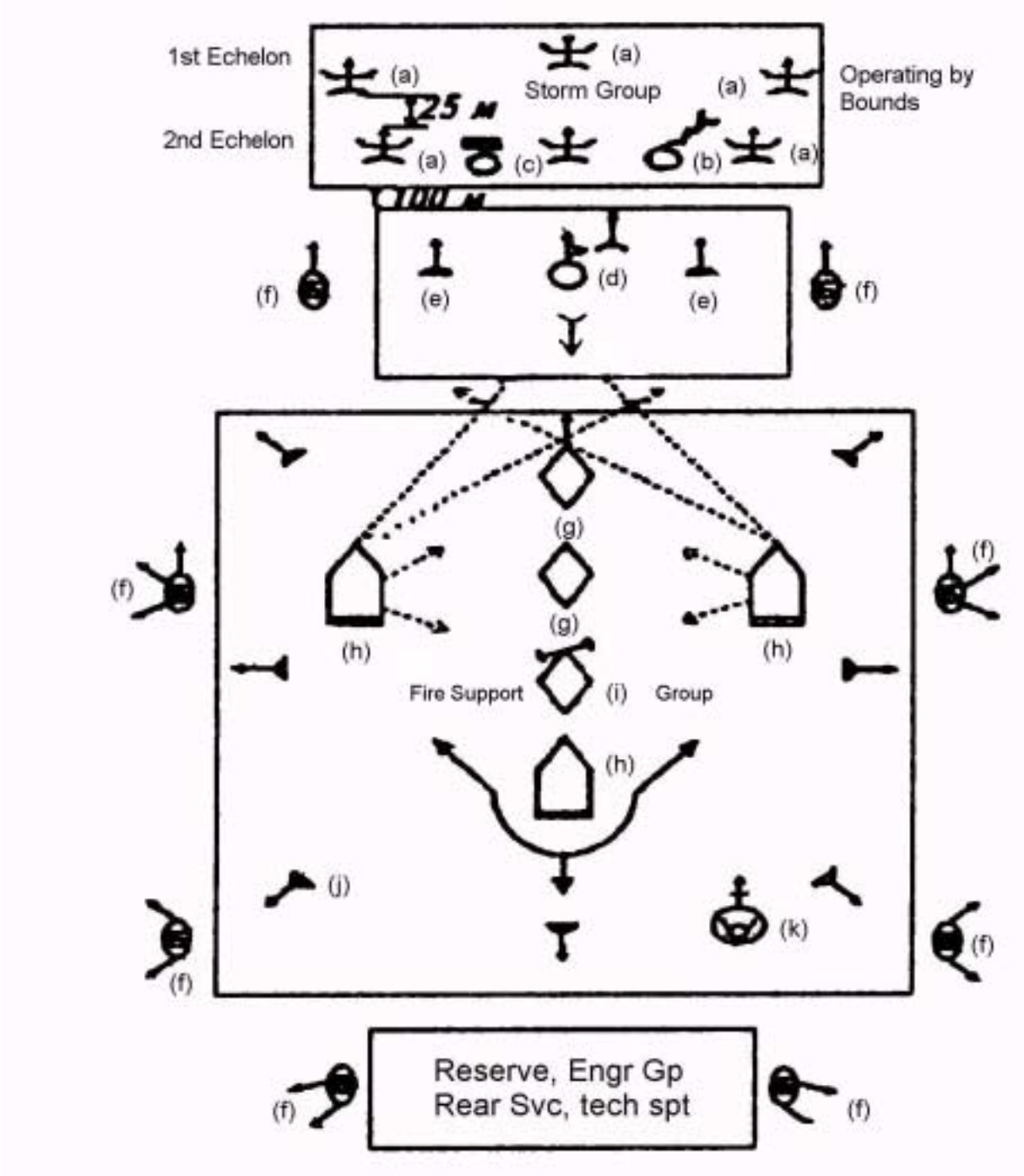

KEY

a. Infantry section
b. Sapper with mine detector
c. Sapper with explosive charge
d. Command group
e. Troika
f. Blocking group
g. Tank
h. BMP (BTR) firing cannon/machine gun across street
i. IMR (combat engineer vehicle)
j. ATGW group (may be armed with SPG recoilless + sniper rifles)
k. Mortar platoon

Engr Gp = Engineer Group
Rear Svc = Rear Services (logistic support)
Tech Spt = Technical Support (equipment repair & recovery)

Urban Combat

Diagram 6 shows the tactical deployment of a "storm detachment" advancing along a main street. A storm detachments was formed around a motor rifle battalion and it should be noted that a battalion tactical group would already include almost all the reinforcing elements required in a storm detachment. The detachment could therefore be formed very quickly, simply by restructuring the tactical group's combat formation. A typical detachment would consist of 3 storm groups (based on motor rifle companies) but it is probable that only one storm group was in action at a time. The other groups would provide a reserve or be used to consolidate captured objectives or be resting before returning to the lead role. Diagram 6 shows a storm group leading an attack with sections advancing by bounds of up to 25 metres. It is supported by sappers with explosive charges. The next element, after an interval of about 100 metres, is the command group. Besides the battalion commander and his immediate staff, it includes a number of *troikas* (discussed later) armed with heavier weapons such as grenade launchers, light machine guns (LMG) or RPO-A flamethrowers. In this case they are supported by snipers, possibly from special forces units. The troikas can cover the advance of the storm group and also provide the commander with a force "in his own hand" with which he can immediately influence the battle.

Heavier weapons are provided by the "fire support group", consisting of a couple of tanks, a platoon of BMP infantry combat vehicles or BTR armoured personnel carriers and an IMR combat engineer vehicle, with a mortar platoon and an ATGW group. The tanks move in the middle of the street, led by the IMR when it is necessary to clear obstacles. Their main armament supports the storm group, especially by engaging snipers and machine gunners on the upper floors of buildings. A BMP or BTR moves on each flank, providing covering fire with its cannon or machine gun against targets above ground level on the opposite side of the street. A third vehicle's arc of fire covers the group against attacks from the rear. The mortars and ATGW (or SPG recoilless rifles) are on call as required. The vehicles are protected by dismounted troops from the infantry vehicles and by more dismounted infantry acting as "blocking groups". The blocking groups (8-10 per detachment) close avenues of approach by which rebels with RPG anti-tank grenade launchers might try to attack the armoured vehicles. (The improvement in Russian tank-infantry cooperation in these street battles may be judged from the claim that only one tank was destroyed in Groznyy and that while it was shielding a group evacuating wounded).

Before the attack of Groznyy storm detachments rehearsed their formations and tactics in suburbs which had already been occupied. Terrain models of the detachment's zone of responsibility were also employed to improve coordination. While these preparations were in progress aviation and artillery "worked over" the target and would be on call to deal with rebel positions threatening the advance. One account, however, suggests that a common ploy was to dispense with heavy preparatory fire immediately before an attack. Instead a detachment would launch a surprise attack just before dawn and occupy a limited objective, one or two blocks perhaps. The enemy, deprived of rest by ceaseless artillery fire, might be taken unawares, but usually made a major effort to recapture the lost ground during the day. Russian motor rifle troops, supported by artillery and aviation, would beat off these attacks and, re-supplied and rested after dark, would repeat the process next day. Once again, these "bite and hold" tactics were far removed from the impetuous attacks of the first war, but the Russians were bound to win these battles of attrition. They were usually also careful to allow the defenders an escape route,

which in the case of Groznyy, led into a minefield. Rebel losses might have been even heavier if the unit holding this sector had remembered to cover the obstacle with fire[15].

The Combat Troika

The *troika* mentioned above is an important example of changing Russian tactics but it is still under development and therefore difficult to define closely. Each reference to "combat troikas or pairs" seems to reflect a slightly different concept. What all have in common is the abandonment of the traditional Soviet/Russian infantry attack in line. Such attacks were part of very centralized tactical plans, depending on the timetabled occupation of a series of objectives. For decades, other armies have trained their infantry to use fire and manoeuvre in small groups, exploiting natural cover. The Soviet Army learnt the necessity for fire and manoeuvre within sections during the Afghan War but then seems to have abandoned the idea as unsuitable for conscript troops fighting a "real war" against a conventional enemy. The lesson was re-learnt in the first Chechen war and although most of the published material on low level tactics still taught the traditional attack in line it appears that in the North Caucasus MD and in other permanent readiness forces more sophisticated tactics were being practised. Sections were taught to advance in threes (troikas) or pairs, covering each other with fire. Such groups might have one man with a light machine gun or RPG and one or two other riflemen. However, some references to troikas during the second war suggest a different composition and role. These troikas are composed entirely of specialist weapons, generally a LMG, a RPG and a sniper but sometimes a RPO-A flamethrower might be substituted. Such troikas might be used to support the action of more conventionally organized infantry at key points. New combat regulations are now promised but until they appear commanders will probably continue to interpret the idea to suit themselves[16].

Assessing Russian Combat Performance

So far this account of Russian operations in the second Chechen war has tended to take them at face value. There is no doubt that the performance of the Russian armed forces looks much better than in the first war. But how does it measure against more universal standards? What changes will be required if the Russian army is to sustain these improvements in the future?

Command & Control

There is no doubt that Russian operations in 1999-2000 have been much better coordinated than in 1994-96, at every level. The political and military leadership seem to have a common understanding of their objectives. Relations between the numerous security ministries have been reasonably good, on the surface at least. There is, however, a legacy of distrust and competition which still restricts effectiveness. At its simplest this is reflected in a lack of standardization in equipment, particularly signals equipment. There is also a current of personal animosity which becomes apparent under stress. In Kosovo in 1999 NATO forces demonstrated that, even with a joint doctrine and joint staffs and many years experience of joint training, a joint campaign is not a guaranteed outcome. It is hardly surprising therefore that the Russians, lacking a joint doctrine, with improvised staffs and only a couple of years of joint exercises, should still have problems. Progress will depend how the outcome of the campaign is viewed in

Moscow. If it is seen as basically successful the ministry of defence will be in a stronger position to impose its views. However, the other ministries will seize on any signs of failure to justify their autonomy. The creation of the new federal districts should encourage greater coordination in peacetime between the ministries but this may not be on the ministry of defence's terms.

Manning and Deployment

This is the area where the greatest problems are likely to lie. A very great effort managed to deploy an overwhelming force to the North Caucasus in 1999. Total strength probably reached 90,000 men at its highest, about two-thirds of whom were ministry of defence troops. The declared aim is to maintain a permanent garrison of about 25,000 men in Chechnya, with about 15,000 men in the new 42nd Guards Motor Rifle Division as the ministry of defence contribution. How quickly can that figure be reached? At the end of July 2000 the Russian force was about 80,000 men and a second rotation of units was due to begin in August. It appears that the ministry of defence intends to rotate major units in Chechnya every six months, although some support units and forces from other ministries apparently serve on shorter tours. This is already stretching Russian resources, particularly in the ground forces and airborne forces. The initial deployment involved most, if not all, of the Russian army's permanently ready forces. Since then, military districts have had to form new units to create 42nd MRD and provide more regimental combat teams to replace those already in Chechnya. Chechnya has also caused a reduction in the manpower pool, because service there counts double. In other words, if a draftee serves in Chechnya for six months he is considered to have done 12 months of his two years conscript service. As a result the number of conscripts discharged in spring 2000 was much larger than the number recruited[17]. Unless the size of the Chechnya deployment can be considerably reduced in the near future there will soon be a manpower crisis in the combat arms, especially the motor rifle, artillery and engineer troops. If the intensity of the war is reduced, the double time regulation could be dropped but it is unlikely that the Russian public would tolerate an increase in the length of service or that it will be possible to increase the conscript intake significantly.

The deficiencies of the conscript intake are not only numerical. The Russian armed forces are only able to draft about 13% of the conscript age-group and complaints about the mental and physical health of the intake are long-standing. Although public support for the second Chechen war has been much higher than the first this does not mean that conscripts are necessarily well-motivated. It is admitted that draft evasion has increased as a result of the war and some predictions before the spring 2000 draft suggested that up to 49,000 would try to dodge service. In addition the difficulties of using conscripts to operate sophisticated weapons systems are being accepted by even the most reactionary of Russian generals. Two reports illustrate this. The first recommended that the crews of the most advanced Russian infantry combat vehicle, the BMP-3, should only be contract servicemen. The second noted that the Sevastopol motor rifle regiment, the only Russian regiment to be fully equipped with BMP-3, was being re-equipped with MT-LB APCs because a six-month tour in Chechnya had reduced the service life of the BMP-3s by half. In other words, maintenance problems were much greater when the vehicles were crewed by conscripts[18].

Unfortunately for the Russian army there is no easy solution to this problem. The inadequacies of the contract service system have already been discussed. Russian *contraktniki* are not the equivalent of professional soldiers as the term is understood

in western armies, lacking their skills and morale. The typical Russian *contraktnik* is closer to the popular image of a mercenary, in his Rambo-like appearance, lack of discipline and tendency to maraud and plunder at every opportunity. The raising of 42nd Motor Rifle Division fully demonstrates all these problems. By one means or another something close to 15,000 men have apparently been recruited (about 70% are conscripts and 30% contract servicemen). However a lack of funds is delaying the completion of the division's barracks and other installations. Other reports refer to delays in the payment of the special Chechnya allowance of over 800 rubles a month to both conscripts and contract servicemen in many units which have served there since August 1999. If pay cannot be guaranteed it will be impossible to maintain a sizeable force in the North Caucasus in the long term and it will certainly be impossible to raise the standard of the forces which do remain there.

Tactical Developments

This paper has already discussed some of the tactical improvements which the Russian forces have been trying to make. This is not a simple process and there is a long way to go before the army is comfortable with these new procedures. A glance at some of the "lessons learned" articles which are now beginning to appear in the Russian military press makes it clear that both problems and solutions have been around for many years. The Afghan war demonstrated the need for better organized tactical groupings, for commanders to understand how to direct artillery or air support or to use reconnaissance troops properly, for infantry sections to be trained in fire and manoeuvre tactics and for snipers to be trained and used properly. All these lessons and many others were neglected or deliberately ignored, only to be repeated in the first Chechen war. Despite the reforms which were supposedly made after 1996, the same problems are being discussed in 2000[19]. It would be extremely optimistic to talk about a "learning curve" and more realistic to ask if the Russian military system is capable of reform at all? Even if, at long last, training manuals and combat regulations are going to be re-written, can Russian military culture be changed at the stroke of a pen? It is easier to write the organization table of a battalion tactical group or of a "modular" structure for combined arms battalions than to find the men to command them. There is already a problem in recruiting and even more in retaining high quality officers. The leaders that a new model army would require are not going to appear overnight and there is no sign that the Russian army has even begun to address the leadership problem. When it does, it will have to produce effective junior leaders, sergeants and corporals as well as officers, and that will be even more difficult.

Prospects For The Future

In the battles of attrition by which the Russian armed forces succeeded in occupying the Chechen republic, they were able to fight and win long range battles on their own terms. When small groups of Russian troops did find themselves at close quarters they generally proved to be inferior to the rebels, just as in the first war. The occupation of Chechnya has not meant victory, however, and the Russians now face a prolonged guerrilla war which will expose the weakness of their forces and their failure to address political problems in their operational planning. The Chechen people may be war-weary but their hatred of Russia has not been reduced by a year's bombing and shelling. The abuses, amounting to war crimes, committed by Russian soldiers, ensure that the Russian administration in Chechnya has no legitimacy in local eyes[20].

Although the rebels may not be able to repeat their counter-offensive of August 1966 in the near future they retain the ability to hit Russian positions or ambush convoys several times a day. Russian official casualty figures suggest that they are losing at least 20 men a week and often about 50. This has been going on for some months and there is no sign that the Russian forces can reduce this drain on their manpower. The Russian high command faces intractable problems. They need to reduce the size of their garrison but cannot afford to reduce the pressure on the guerrillas. Effective offensive action against the rebels will require much better trained troops than the Russians have fielded so far. Poorly trained troops sitting in strongpoints and blockhouses with sinking morale will not make much of a defensive force in the long term either. In the first phase of the campaign it was calculated that 40% of Russian casualties occurred in accidents caused by bad training and sloppiness.

Russian tactical performance has improved since 1996. The second Chechen war has not been a repeat of the first war. It may, however, be a repeat of the Afghan War of 1979-87. There the Russians succeeded in occupying the country only to find themselves in a tactical stalemate which destroyed the morale of their forces and eroded public support for the war. During the Afghan War the armed forces lost the prestige and trust which they had traditionally enjoyed. The Second Chechen War was a gamble to restore that position. After twelve months of fighting it looks increasingly as though that gamble is going to fail. What will the consequences be for the Russian armed forces and for Russia itself?

ENDNOTES

---

1 See the following articles for discussions of aspects of joint groupings: Yu N Tuchkov, *Joint Force Groupings & Methods Of Their Employment In Armed Conflicts & Local Wars,* Voyennaya Mysl (VM), 2/97, p30-35. Yu N Tuchkov, *On Ways Of Creating Joint Operational Force Groupings,* VM 3/98, p7-13. L G Zhukhovskiy, *Organization of Engineer Support For Joint Force Groupings In Local Wars & Armed Conflicts,* VM 3/98, p44-50. D A Prikhozhiy, *On Command & Control of Force Groupings During Armed Conflicts,* VM 4/99, p42-44. V Anikeyev, S Korotkov & V Ospinnikov, *The Main Thing Is Cooperation,* Armeyskiy Sbornik (AS) 7/99, p42-44. V N Bol'shakov & I A Zubkov, *Some Aspects Of The Medical Support Of Forces In Armed Conflicts,* Voyenno-Meditsinskiy Zhurnal (VMZh) 8/99, p15-22.

2 See for example Yu Burtin, *What's Behind The Coup?,* Svobodnaya Mysl' 3/00, p4-9.

3 See the contribution of Col-Gen M I Karatuyev, chief of rocket troops and artillery, to VM's "round-table" on the lessons of the counter-terrorist operation in the North Caucasus, VM 3/00, p12.

4 A Shaburkin, *The Entry of Troops Into Chechnya Is Completed,* Nezavisimoye Voyennoye Obozreniye (NVO) 41/99, p1.

5 P Goglevskiy, *Hard In Training,* AS 1/00, p38.

6 O Bedula, *Volunteers,* Krasnaya Zvezda (KZ) 15/9/99, p2; N Kormil'tsev, *The Power Of The Siberian Army Is Growing,* KZ 3/2/00, p1; on the formation of 42nd MRD see V Solov'yev, *Ministry Of Defence Claims Full Control Of Chechnya,* NVO 12/00, p1; V Filichkin, *Apes At War,* Delovoy Ural 20/6/00, p6.

7 ITAR-TASS, 11/4/00; V I Putilin, *The Country Needs A Strong Army,* KZ 16/2/00, p1; ITAR-TASS, 11/4/00.

---

[8] A Oliynik, *Short-Sighted Reduction*, NVO 2/00, p8; AVN report 13/6/00; G Shpak, *Standard of Service To The Fatherland*, KZ 2/8/00 internet edition.

[9] S Bashev, *Together With The Infantry*, AS 6/00, p43.

[10] M Karatuyev, *The God Of War Changes Tactics*, NVO 45/99, p1.

[11] V N Zaritskiy, *On Planning The Fire Destruction Of The Enemy In Operations*, VM 2/00.

[12] V Georgiyev, *The Role Of Army Aviation is Growing*, NVO 4/00, p2.

[13] KZ 9/7/00; Interfax 11/8/00.

[14] D Zaytsev, *They Learnt A Bitter Lesson*, AS 6/000, p42.

[15] This account of Russian tactics is mostly drawn from D Zaytsev, *They Learnt A Bitter Lesson*, AS 6/00, p41 and V Popov, *So That Each One Knows His Manoeuvre*, KZ 4/5/00, p1.

[16] For examples of the use of troikas see V Bulgakov, *Service Here Is Examined In Reliability*, KZ 5/1/99, p1; Bedula op cit; Lt-Col Aleksandr L, *Don't Make The Same Mistake Twice*, KZ 27/10/99; A Orekhov, *Components of Professionalism*, AS 6/98, p28.

[17] Interfax, 4/4/00.

[18] Maj Sergey V, *How To Strengthen A Battalion In The Mountains*, KZ 23/2/00, p2; AVN report 31/7/00.

[19] See, for example, the round-table discussion already referred to in AS 6/00, p5-21; also V Matyash *A Blow From Ambush* KZ 26/4/00 p1; O Finayev, *We Took Combat Experience Into Account When Working Out Our Plans*, Voyennyi Vestnik Yuga Rossii, 23/00.

[20] See the Human Rights Watch reports on their website http://www.hrw.org/campaigns/russia/chechnya/

Disclaimer

The views expressed are those of the Author and not necessarily those of the UK Ministry of Defence